parweld
WELDING THE FUTURE

XTS 204

OPERATOR MANUAL

ISSUE 2

Welcome

Thank you and congratulations on choosing Parweld. This Owner's Manual is designed to help you get the most out of your Parweld products. Please take time to read the Safety precautions. They will help you protect yourself against potential hazards in the workplace. With proper maintenance this equipment should provide years of reliable service. All our systems conform to ISO9001: 2015 and are independently audited by NQA.

The entire product range carries the CE mark, and is constructed in accordance with European directives and the product specific standards where they apply.

Further Information

Parweld is the UK's leading manufacturer of MIG, TIG and Plasma torches and consumables.

For more information about Parweld's complete range visit: www.parweld.co.uk

parweld.com parweld ParweldTV parweld_uk parweld-ltd

Contents

	Page
1.0 Safety Precautions	**4**
2.0 Product Description	**5**
3.0 Technical Specifications	**5**
4.0 Description of Controls	**6**
5.0 Installation	**6**
5.1 Unpacking the Machine	6
5.2 Location	6
5.3 Input and Grounding Connection	6
5.4 Output Polarity Connections	6
5.5 Torch Installation	7
5.6 Work Return Lead Connection	7
6.0 Operation	**7**
6.1 Mma Welding Guide	7
6.2 Basic Tig Welding Guide	7
7.0 Fault Finding	**8-10**
8.0 Accessories	**11**
8.1 Torch Spares	11
8.2 Gas Equipment	11
8.3 Torch Exploded View	12
9.0 Ec Declaration of Conformity	**14**
9.1 Rohs Compliance Declaration	14
9.2 Weee Statement	15
9.3 Statement of Warranty	15

1.0 Safety Precautions

ELECTRIC SHOCK can kill.

Touching live electrical parts can cause fatal shocks or severe burns. The electrode and work circuit is electrically live whenever the output is on. The input power circuit and machine internal circuits are also live when power is on.

Do not touch live electrical parts.

Wear dry, sound insulating gloves and body protection.

Insulate yourself from work and ground using dry insulating mats or covers big enough to prevent any physical contact with the work or ground.

Additional safety precautions are required when any of the following electrically hazardous conditions are present: in damp locations or while wearing wet clothing; on metal structures such as floors, gratings, or scaffolds; when in cramped positions such as sitting, kneeling, or lying; or when there is a high risk of unavoidable or accidental contact with the work piece or ground.

Disconnect input power before installing or servicing this equipment. Lockout/tagout input power according to Safety Standards.

Properly install and ground this equipment according to national and local standards.

Always verify the supply ground - check and ensure that input power cable ground wire is properly connected to ground terminal in the receptacle outlet.

When making input connections, attach proper grounding conductor first - double-check connections.

Frequently inspect input power cable for damage or bare wiring - replace cable immediately if damaged - bare wiring can kill.

Turn off all equipment when not in use.

Do not use worn, damaged, under sized, or poorly spliced cables.

Do not drape cables over your body.

If earth grounding of the work piece is required, ground it directly with a separate cable.

Do not touch electrode if you are in contact with the work, ground, or another electrode from a different machine.

Use only well-maintained equipment. Repair or replace damaged parts at once. Maintain unit according to manual.

Wear a safety harness if working above floor level.

Keep all panels and covers securely in place.

Clamp work cable with good metal-to-metal contact to work piece or worktable as near the weld as practical.

Insulate work clamp when not connected to work piece to prevent contact with any metal object.

Welding produces fumes and gases. Breathing these fumes and gases can be hazardous to your health.

FUMES AND GASES can be hazardous.

Keep your head out of the fumes. Do not breathe the fumes.
If inside, ventilate the area and/or use local forced ventilation at the arc to remove welding fumes and gases.

If ventilation is poor, wear an approved respirator.

Read and understand the Material Safety Data Sheets (MSDS's) and the manufacturer's instructions for metals, consumable, coatings, cleaners, and de-greasers.

Work in a confined space only if it is well ventilated, or while wearing an air-supplied respirator. Always have a trained watch person nearby. Welding fumes and gases can displace air and lower the oxygen level causing injury or death. Be sure the breathing air is safe.

Do not weld in locations near de-greasing, cleaning, or spraying operations. The heat and rays of the arc can react with vapours to form highly toxic and irritating gases.

Do not weld on coated metals, such as galvanized, lead, or cadmium plated steel, unless the coating is removed from the weld area, the area is well ventilated, and while wearing an air-supplied respirator. The coatings and any metals containing these elements can give off toxic fumes if welded.

ARC RAYS can burn eyes and skin.
Arc rays from the welding process produce intense, visible and invisible (ultraviolet and infrared) rays that can burn eyes and skin. Sparks fly off from the weld.

Wear an approved welding helmet fitted with a proper shade of filter lense to protect your face and eyes when welding or watching

Wear approved safety glasses with side shields under your helmet.

Use protective screens or barriers to protect others from flash, glare and sparks; warn others not to watch the arc.

Wear protective clothing made from durable, flame resistant material (leather, heavy cotton, or wool) and foot protection. Welding on closed containers, such as tanks, drums, or pipes, can cause them to blow up. Sparks can fly off from the welding arc. The flying sparks, hot work piece, and hot equipment can cause fires and burns. Accidental contact of electrode to metal objects can cause sparks, explosion, overheating, or fire. Check and be sure the area is safe before doing any welding.

WELDING can cause fire or explosion.
Remove all flammables within 10m of the welding arc. If this is not possible, tightly cover them with approved covers.

Do not weld where flying sparks can strike flammable material.

Protect yourself and others from flying sparks and hot metal.

Be alert that welding sparks and hot materials from welding can easily go through small cracks and openings to adjacent areas.

Watch for fire, and keep a fire extinguisher nearby. Be aware that welding on a ceiling, floor, bulkhead, or partition can cause fire on the hidden side.

Do not weld on closed containers such as tanks, drums, or pipes, unless they are properly prepared according to local regulations

Connect work cable to the work as close to the welding area as practical to prevent welding current from travelling along possibly unknown paths and causing electric shock, sparks, and fire hazards.

Wear oil-free protective garments such as leather gloves, heavy shirt, cuffless trousers, high shoes, and a cap. Remove any combustibles, such as a butane lighter or matches from your person before doing any welding.

FLYING METAL can injure eyes.
Welding, chipping, wire brushing, and grinding cause sparks and flying metal. As welds cool they can throw off slag. Wear approved safety glasses with side shields even under your welding helmet.

BUILDUP OF GAS can injure or kill.
Shut off shielding gas supply when not in use. Always ventilate confined spaces or use approved air-supplied respirator.

HOT PARTS can cause severe burns.
Do not touch hot parts with bare hands.

Allow cooling period before working on gun or torch.

To handle hot parts, use proper tools and/or wear heavy, insulated welding gloves and clothing to prevent burns.

MAGNETIC FIELDS can affect pacemakers.
Pacemaker wearers keep away.

Wearers should consult their doctor before going near arc welding, gouging, or spot welding operations.

NOISE can damage hearing.
Noise from some processes or equipment can damage hearing.

Wear approved ear protection if noise level is high.

Shielding gas cylinders contain gas under high pressure.

CYLINDERS can explode if damaged.
Protect compressed gas cylinders from excessive heat, mechanical shocks, physical damage, slag, open flames, sparks, and arcs. Install cylinders in an upright position by securing to a stationary support or cylinder rack to prevent falling or tipping. Keep cylinders away from any welding or other electrical circuits. Never drape a welding torch over a gas cylinder. Never allow a welding electrode to touch any cylinder. Never weld on a pressurized cylinder - explosion will result. Use only correct shielding gas cylinders, regulators, hoses and fittings designed for the specific application; maintain them and associated parts in good condition.

Turn face away from valve outlet when opening cylinder valve.

Use the right equipment, correct procedures and sufficient number of persons to lift and move cylinders.

Read and follow instructions on compressed gas cylinders, associated equipment and Compressed Gas Association (CGA) recommendations.

2.0 Product Description

This welding machine is manufactured using advanced inverter technology. The input voltage is rectified to DC and then inverted to high frequency AC voltage, before being converted back to DC for the output .This allows the use of a much smaller transformer and so allowing weight saving and improved power efficiency.

3.0 Technical Specifications

	Machine Model
	XTS 204 MMA
Input voltage	230V +/- 10%
Frequency	50/60Hz
Input current	40.5A max 20eff
Fuse rating	32A
Output OCV	60
Output load voltage	20.4-28
Output Current	10-200A DC

4.0 Description of Controls

1) ON/OFF Switch for switching on or off the mains supply to the machine. Note the output of the machine is permanently on unless the on/off switch is in the off position.

2) Power light This indicates mains power is applied to the machine and that the machine is currently switched on when the light is illuminated.

3) Fault light This indicates a fault or over temperature condition with the machine refer to the fault finding section for further information.

4) Digital Amperage display, displays the preset and actual welding currents.

5) Output power control knob for adjustment of the power output of the machine in LIFT-TIG or MMA mode.

6) Welding mode selector for MMA and Lift TIG.

7) Output power connection + (Positive) this is the 35mm Twist lock connection socket for the connection of the positive welding lead.

8) Output power connection - (Negative) this is the 35mm Twist lock connection socket for the connection of the negative welding lead.

5.0 Installation

Read entire installation section before starting installation.

SAFETY PRECAUTIONS

- **ELECTRIC SHOCK can kill.**
- **Only qualified personnel should perform this installation.**
- **Only personnel that have read and understood the Operating Manual should install and operate this equipment.**
- **Machine must be grounded per any national, local or other applicable electrical regulations.**
- **The power switch is to be in the OFF position when installing work cable and electrode cable and when connecting other equipment.**

5.1 Unpacking the Machine

Carefully remove the machine from the packaging, we recommend you retain the packaging until the machine has been fully installed and tested incase it has been damaged in transit and has to be returned to the re-seller.

5.2 Location

Be sure to locate the welder according to the following guidelines:

In areas free from moisture and dust.

Ambient temperature between 0-40^{0}C.

In areas free from oil, steam and corrosive gases.

In areas not subjected to abnormal vibration or shock.

In areas not exposed to direct sunlight or rain.

Place at a distance of 12” (300 mm) or more from walls or similar that could restrict natural airflow for cooling.

5.3 Input and Grounding Connection

WARNING

Before starting the installation, check that your power supply is adequate for the voltage, amperage, phase, and frequency specified on the Machine nameplate.

Operate the welding power source from a single-phase 50/60 Hz, AC power supply. The input voltage must match one of the electrical input voltages shown on the input data label on the unit nameplate. The XTS204 machine should only be used on 230v supply.

Have a qualified electrician connect the input plug. For long runs over 30m, larger copper wires should be used. The green/yellow wire in the input cable connects to the frame of the machine. This ensures proper grounding of the machine when the machine plug is inserted into the receptacle.

5.4 Output Polarity Connections

Electrode Polarity

MMA electrodes are generally connected to the ‘+’ terminal and the work return lead to the ‘-’ terminal.

But if in doubt consult the electrode manufacturer’s literature.

If TIG welding the torch should always be connected to the ‘-’ terminal.

5.5 Torch Installation

MMA Cable Connections

Connect electrode lead to positive terminal

TIG Welding Cable Connection

Connect the TIG torch to the - terminal

5.6 Work Return Lead Connection

MMA Cable Connections

Connect work lead to negative terminal

TIG Welding

Connect the work return lead to the + terminal

6.0 Operation

WARNING

When using an open arc process, it is necessary to use correct eye, head, and body protection.

6.1 MMA Welding Guide

Effects of MMA Welding Various Materials

High Tensile and Alloy Steels

The two most prominent effects of welding these steels are the formation of a hardened zone in the weld area, and, if suitable precautions are not taken, the occurrence in this zone of under-bead cracks. Hardened zone and under-bead cracks in the weld area may be reduced by using the correct electrodes, preheating, using higher current settings, using larger electrodes sizes, short runs for larger electrode deposits or tempering in a furnace.

Manganese Steels

The effect on manganese steel of slow cooling from high temperatures is enbrittlement. For this reason it is absolutely essential to keep manganese steel cool during welding by quenching after each weld or skip welding to distribute the heat.

Cast Iron

Most types of cast iron, except white iron, are weldable. White iron, because of its extreme brittleness, generally cracks when attempts are made to weld it. Trouble may also be experienced when welding white-heart malleable, due to the porosity caused by gas held in this type of iron.

Copper and Alloys

The most important factor is the high rate of heat conductivity of copper, making preheating of heavy sections necessary to give proper fusion of weld and base metal.

Types of Electrodes

Arc welding electrodes are classified into a number of groups depending on their applications. There are a great number of electrodes used for specialized industrial purposes which are not of particular interest for everyday general work. These include some low hydrogen types for high tensile steel, cellulose types for welding large diameter pipes, etc. The range of electrodes dealt with in this publication will cover the vast majority of applications likely to be encountered; all are easy to use and will all work on even the most basic of welding machines.

Metals being joined & electrode comments

Mild Steel

6013 ideal electrodes for all general purpose work. Features include outstanding operator appeal, easy arc starting and low spatter.

Cast Iron

99% nickel suitable for joining all cast irons except white cast iron

Stainless Steel

316l-16 high corrosion resistance. Ideal for dairy work, etc. On stainless steels.

6.2 Basic TIG Welding Guide

TIG Welding Cable Connection

Connect the TIG torch to the - terminal and the work return lead to the + terminal for direct current straight polarity. Direct current straight polarity is the most widely used polarity for DC TIG welding. It allows limited wear of the electrode since 70% of the heat is concentrated at the work piece. Connect the gas hose on the TIG torch to the gas outlet on the gas regulator. Move the selector switch on the front panel of the machine to the LIFT-TIG position.

Torch Starting in LIFT-TIG Mode

Ensure the gas supply is switched on and gas is flowing from the front of the torch nozzle. Briefly contact the tip of the tungsten electrode down onto the work piece with the torch at around 70^0 from vertical, lift the torch up from the work piece to draw out an arc. To prevent melting of the end of the tungsten, do so in a smooth rapid movement

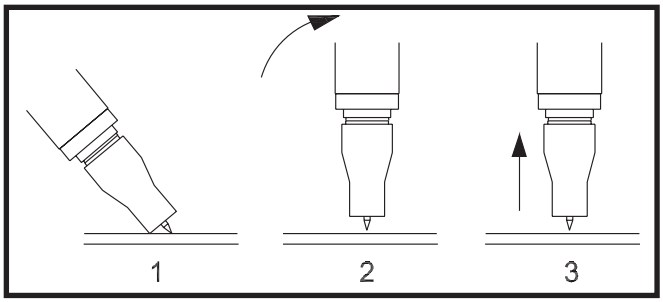

TIG Welding Guide

Electrode diameter	DC current (amps)
0.040” (1.0mm)	30 – 60
1/16” (1.6mm)	60 – 115
3/32” (2.4mm)	100 – 165

Tungsten Electrode Types

Electrode type	Welding application	Colour code
Thoriated 2%	DC welding of mild steel, stainless steel and copper. Excellent arc starting, long life, high current carrying capacity.	RED
Ceriated 2%	DC welding of mild steel, stainless steel, copper, aluminium, their alloys longer life, more stable arc, easier starting, wider current range, narrower more concentrated arc	GREY

Guide for Selecting Filler Wire Diameter

Filler wire diameter	DC current range
1/16” (1.6 mm)	20 - 90
3/32” (2.4 mm)	65 - 115
1/8” (3.2 mm)	100 - 165
3/16” (4.8 mm)	200-350

The filler wire diameter specified is a guide only, other diameter wires may be used according to the welding application.

Shielding Gas Selection

Alloy	Shielding Gas
Aluminium & Alloys	Pure Argon
Carbon Steel	Pure Argon
Stainless Steel	Pure Argon
Nickel Alloy	Pure Argon
Copper	Pure Argon
Titanium	Pure Argon

7.0 Fault Finding

MMA Welding Problem

Description	Possible Cause	Remedy
Gas pockets or voids in weld metal (porosity)	(a) Electrodes are damp. (b) Welding current is too high. (c) Surface impurities such as oil, grease, paint, etc	(a) Dry electrodes before use (b) Reduce welding current (c) Clean joint before welding
Crack occurring in weld metal soon after solidification.	(a) Rigidity of joint. (b) Insufficient throat thickness. (c) Cooling rate is too high.	(a) Redesign to relieve weld joint of severe stresses or use crack resistance electrodes. (b) Travel slightly slower to allow greater build up in throat. (c) Preheat plate and cool slowly.
A gap is left by failure of the weld metal to fill the root of the weld	(a) Welding current is too low. (b) Electrode too large for joint. (c) Insufficient gap (d) Incorrect sequence	(a) Increase welding current (b) Use smaller diameter electrode. (c) Allow wider gap (d) Use correct build-up sequence
Portions of the weld run do not fuse to the surface of the metal or edge of the joint.	(a) Small electrodes used on heavy cold plate (b) Welding current is too low (c) Wrong electrode angle (d) Travel speed of electrode is too high (e) Scale or dirt on joint surface	(a) Use larger electrodes and preheat the plate (b) Increase welding current (c) Adjust angle so the welding arc is directed more into the base metal (d) Reduce travel speed of electrode (e) Clean surface before welding.

Description	Possible Cause	Remedy
Non-metallic particles are trapped in the weld metal (slag inclusion).	(a) Non-metallic particles may be trapped in undercut from previous run. (b) Joint preparation too restricted. (c) Irregular deposits allow slag to be trapped. (d) Lack of penetration with slag trapped beneath weld bead. (e) Rust or mill scale is preventing full fusion. (f) Wrong electrode for position in which welding is done.	(a) If bad undercut is present, clean slag out and cover with a run from a smaller diameter electrode. (b) Allow for adequate penetration and room for cleaning out the slag (c) If very bad, chip or grind out Irregularities (d) Use smaller electrode with sufficient current to give adequate penetration. adequate penetration. Use suitable tools to remove all slag from corners (f) Use electrodes designed for position in which welding is done, otherwise proper control of slag is difficult.

TIG Welding Problems

Weld quality is dependent on the selection of the correct consumable, maintenance of equipment and proper welding technique.

Description	Possible Cause	Remedy
Excessive bead build up or poor penetration or poor fusion at edges of weld	Welding current is too low	Increase weld current and/or faulty joint preparation
Weld bead too wide and flat or undercut at edges of weld or excessive burn through	Welding current is too high	Decrease weld current
Weld bead too small or insufficient penetration or ripples in bead are widely spaced apart	Travel speed too fast	Reduce travel speed
Weld bead too wide or excessive bead build up or excessive penetration in butt joint	Travel speed too slow	Increase travel speed
Uneven leg length in fillet joint	Wrong placement of filler rod	Re-position filler rod
Electrode melts when arc is struck	Electrode is connected to the '+' terminal	Connect the electrode to the '-' terminal
Dirty weld pool	(a) Electrode contaminated through contact with work piece or filler rod material (b) Gas contaminated with air	(a) Clean the electrode by grinding off the contaminates (b) Check gas lines for cuts and loose fitting or change gas cylinder
Electrode melts or oxidizes when an arc is struck	(a) No gas flowing to welding region (b) Torch is clogged with dust (c) Gas hose is cut (d) Gas passage contains impurities (e) Gas regulator is turned off (f) Torch valve is turned off (g) The electrode is too small for the welding current	(a) Check the gas lines for kinks or breaks and gas cylinder contents (b) Clean torch (c) Replace gas hose (d) Disconnect gas hose from torch then raise gas pressure to blow out impurities. (e) Turn on (f) Turn on (g) Increase electrode diameter or reduce the welding current
Poor weld finish	Inadequate shielding gas	Increase gas flow or check gas line for gas flow problems
Arc flutters during TIG welding	(a) Tungsten electrode is too large for the welding current (b) Absence of oxides in the Weld pool.	(a) Select the right size electrode. Refer to basic TIG welding guide. (b) Refer basic TIG welding guide for ways to reduce arc flutter

Description	Possible Cause	Remedy
Welding arc cannot be established	(a) Work clamp is not connected to the work piece or the work/torch leads are not connected to the machine (b) Torch lead is discon-nected (c) Gas flow incorrectly set, cylinder empty or the torch valve is off	a) Connect the work clamp to the work piece or connect the work/torch leads to the right welding terminals. (b) Connect it to the '-' terminal. (c) Select the right flow rate, change cylinders or turn torch valve on.
Arc start is not smooth	(a) Tungsten electrode is too large for the welding current . (b) The wrong electrode is being used for the welding job. (c) Gas flow rate is too high. (d) Incorrect shielding gas is being used. (e) Poor work clamp connection to work piece	(a) Select the right size electrode (b) Select the right electrode type. Refer to basic TIG welding guide (c) Select the correct rate for the welding job. Refer to basic TIG welding guide (d) Select the right shielding gas. Refer to basic TIG welding guide (e) Improve connection to work piece

Power Source Problems

Description	Possible Cause	Remedy
The welding arc cannot be established	(a) The primary supply voltage has not been switched on (b) The welding power source switch is switched off (c) Loose connections internally	(a) Switch on the primary supply voltage (b) Switch on the welding power source. (c) Have a qualified service engineer repair the connection
Maximum output welding current cannot be achieved with nominal mains supply voltage	Defective control circuit	Have a qualified service engineer inspect then repair the welder
Welding current reduces when welding	Poor work lead connection to the work piece	Ensure that the work lead has a reliable electrical connection to the work piece

Description	Possible Cause	Remedy
A total loss of power, pilot lamp is off, no output, the fan is not operating	(a) Failure of input voltage (b) Possible over voltage (c) Internal fault with the machine	(a) Re-establish mains supply (b) Check voltage and if necessary move machine to alternative supply (c) Have a qualified service engineer inspect then repair the welder
Fault lamp is on, no power output	(a) Machine overheated (b) Over current state (c) Internal fault with machine	(a) Allow to cool with fan running (b) Switch off mains power to the machine and re start (c) Have a qualified service engineer inspect then repair the welder

ROUTINE MAINTENANCE

The only routine maintenance required for the power supply is a thorough cleaning and inspection, with the frequency depending on the usage and the operating environment.

Warning

Disconnect primary power at the source before removing the cover. Wait at least two minutes before opening the cover to allow the primary capacitors to discharge.

To clean the unit, remove the screws securing the outer cover, lift off the outer cover and use a vacuum cleaner to remove any accumulated dirt and dust. The unit should also be wiped clean, if necessary; with solvents that are recommended for cleaning electrical apparatus.

8.0 Accessories

8.1 Torch Spares

Stock Code	Description
CKE403	Electrode Holder with 3m Lead
CKC403	Earth Lead 3m with Clamp
WP17V-12-2IX	Scratch Start Tig Torch
WP17AK	Tig Spares Kit in Plastic Case

8.2 Gas Equipment

Everyday Gas Regulators – 300 BAR Single Stage

Features
Flow rate up to 96m³/h (3389 ft³/h)

- Full 300 bar capability
- Outlet pressure indicated on the bonnet
- Bottom entry design suited for top outlet cylinder valves

Fittings

- Fitted with standard 3/8" BSP outlet
- Fitted with 5/8" BSP inlet connections

Stock Code	Description	Maximum Outlet Pressure
E700140	Argon Preset Regulator	3.0 Bar
E700141	Argon Indicator Regulator	3.0 Bar
E700113	1 Gauge Argon	30 lpm flow
E700123	2 Gauge Argon	30 lpm flow

Flow Meters

Features

- Designed from brass bar whilst the tube and cover are moulded from high quality polycarbonate to ensure high impact resistance and clarity.
- Calibrated to operate at an inlet pressure of 30PSI.
- Sensitive needle valve provides easy adjustment and the downward facing outlet connection eliminates hose kinking.

Fittings

- Fitted with standard 3/8" BSP inlet and outlet connections

Stock Code	Des cription
706100	Flow Meter Mixed Gas 15 lpm

8.3 Torch Exploded View

WP17

Air Cooled TIG Welding Torch

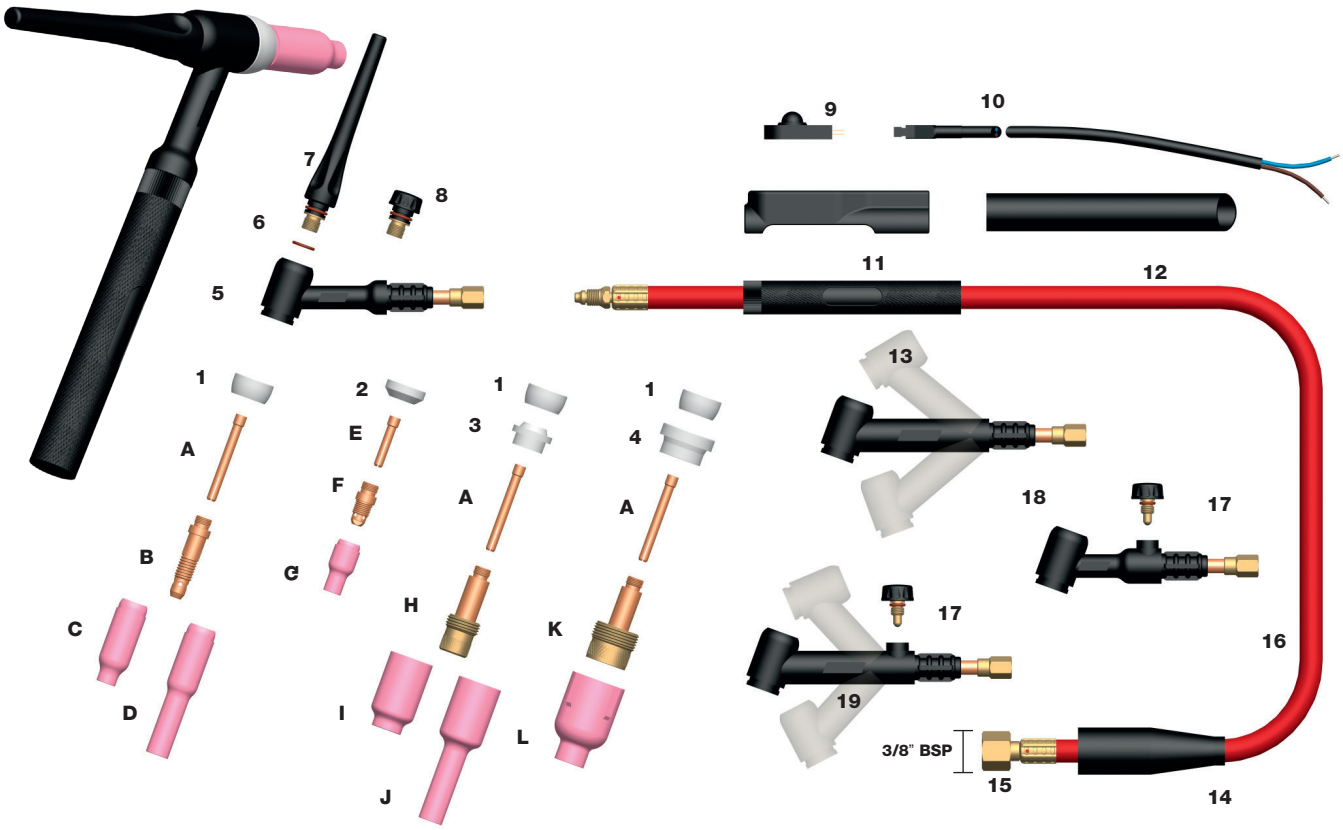

Model		
Description	**Stock Code 12ft (3.8m)**	**25ft (7.6m)**
Valved TIG Torch c/w 2 Piece Power Cable and Twist lock connection	WP17V-12-2-IX	WP17V-25-2-IX
Valved Flexible neck TIG Torch c/w 2 Piece Power Cable and Twist lock connection	WP17VFX-12-2-IX	WP17VFX-25-2-IX

Standard Collet

	Stock Code	Description
A	10N21	Standard Collet .020” 0.5mm Bore
	10N22	Standard Collet .040” 1.0mm Bore
	10N23	Standard Collet 1/16” 1.6mm Bore
	10N23M	Standard Collet 5/64” 2.0mm Bore
	10N24	Standard Collect 3/32” 2.4mm Bore
	10N25	Standard Collet 1/8” 3.2mm Bore
	54N20	Standard Collet 5/32” 4.0mm Bore

Standard Collet Body

	Stock Code	Description
B	10N29	Standard Collet Body. 020” 0.5mm Bore
	10N30	Standard Collet Body. 040” 1.0mm Bore
	10N31	Standard Collet Body 1/16” 1.6mm Bore
	10N32	Standard Collet Body 3/32” 2.4mm Bore
	10N28	Standard Collet Body. 1/8” 3.2mm Bore
	406488	Standard Collet Body 5/32” 4.0mm Bore

Standard Ceramic Cup

	Stock Code	Description
C	10N50	Standard Ceramic Cup 1/4” 6mm Bore
	10N49	Standard Ceramic Cup 5/16” 8mm Bore
	10N48	Standard Ceramic Cup 3/8” 10mm Bore
	10N47	Standard Ceramic Cup 7/16” 11mm Bore
	10N46	Standard Ceramic Cup 1/2” 13mm Bore
	10N45	Standard Ceramic Cup 5/8” 16mm Bore
	10N44	Standard Ceramic Cup 3/4” 19mm Bore

Standard Long Ceramic Cup

	Stock Code	Description
D	10N49L	Long Ceramic Cup 5/16” 8mm Bore
	10N48L	Long Ceramic Cup 3/8” 10mm Bore
	10N47L	Long Ceramic Cup 7/16” 11mm Bore

Stubby Series Collet

	Stock Code	Description
E	10N21S	Stubby Collet .020” 0.5mm Bore
	10N22S	Stubby Collet .040” 1.0mm Bore
	10N23S	Stubby Collet 1/16” 1.6mm Bore
	10N24S	Stubby Collet 3/32” 2.4mm Bore
	10N25S	Stubby Collet 1/8” 3.2mm Bore

Stubby Collet Body

	Stock Code	Description
F	17CB20	Stubby Collet Body .020-1/8 Bore

Stubby Series Ceramic Cup

	Stock Code	Description
G	13N08	Standard Ceramic Cup 1/4” 6mm Bore
	13N09	Standard Ceramic Cup 5/16” 8mm Bore
	13N10	Standard Ceramic Cup 3/8” 10mm Bore
	13N11	Standard Ceramic Cup 7/16” 11mm Bore
	13N12	Standard Ceramic Cup 1/2” 13mm Bore
	13N13	Standard Ceramic Cup 5/8” 16mm Bore

Gas Lens Body

	Stock Code	Description
H	45V29	Gas Lens Body .020” 0.5mm Bore
	45V24	Gas Lens Body .040” 1.0mm Bore
	45V25	Gas Lens Body 1/16” 1.6mm Bore
	45V26	Gas Lens Body 3/32” 2.4mm Bore
	45V27	Gas Lens Body 1/8” 3.2mm Bore

Standard Gas Lens Cup

	Stock Code	Description
I	54N18	Standard Gas Lens Cup 1/4” 6mm Bore
	54N17	Standard Gas Lens Cup 5/16” 8mm Bore
	54N16	Standard Gas Lens Cup 3/8” 10mm Bore
	54N15	Standard Gas Lens Cup 7/16” 11mm Bore
	54N14	Standard Gas Lens Cup 1/2” 13mm Bore
	54N19	Standard Gas Lens Cup 1 1/16” 17mm Bore

Long Gas Lens Cup

	Stock Code	Description
J	54N17L	Long Gas Lens Cup 5/16” 8mm Bore
	54N16L	Long Gas Lens Cup 3/8” 10mm Bore
	54N15L	Long Gas Lens Cup 7/16” 11mm Bore

Large Diameter Gas Lens Body

	Stock Code	Description
K	45V116	Large Diameter Gas Lens Body 1/16” 1.6mm Bore
	45V64	Large Diameter Gas Lens Body 3/32” 2.4mm Bore
	995795	Large Diameter Gas Lens Body 1/8” 3.2mm Bore

Large Diameter Gas Lens Cup

	Stock Code	Description
L	57N75	Large Diameter Gas Lens Cup 3/8” 10mm Bore
	57N74	Large Diameter Gas Lens Cup 1/2” 13mm Bore
	53N88	Large Diameter Gas Lens Cup 5/8” 16mm Bore
	53N87	Large Diameter Gas Lens Cup 3/4” 19mm Bore

Components

	Stock Code	Description
1	18CG	Cup Gasket
2	18CG20	Cup Gasket for Stubby Collet Body
3	54N01	Gas Lens Insulator (use with 18CG)
4	54N63	Insulator Large Diameter Gas Lens (use with 18CG)
5	WP17	Torch Body including Cup Gasket
6	98W18	Back Cap ‘O’ Ring
7	57Y02	Back Cap Long
8	57Y04	Back Cap Short
9	950	Microswitch Bulbous
NI	950F	Microswitch Flat
10	950-40	Switch & Leads x 3.8mt/12.5ft
	950-80	Switch & Leads x 7.6mt/25ft
11	RDZ0591	Snap On Boot
NI	607664	Rubber Boot
12	609123	Neoprene Sheath x 3.8mt/12.5ft
	609125	Neoprene Sheath x 7.6mt/25ft
13	105Z55	Handle
14	0315071	Insulation Boot
15	57Y01	Power Cable x 3.8mt/12.5ft Vinyl
	57Y03	Power Cable x 7.6mt/25ft Vinyl
	57Y01R	Power Cable x 3.8mt/12.5ft Rubber
	57Y03R	Power Cable x 7.6mt/25ft Rubber
	57Y01-2	Power Cable x 3.8mt/12.5ft 2 Piece
	57Y03-2	Power Cable x 7.6mt/25ft 2 Piece
16	WP17V	Torch Body Valve
17	VS-2	Valve Stem
18	WP17FX	Torch Body Flexible
19	WP17VFX	Torch Body Flexi-Valve

NI – Not Illustrated

9.0 EC Declaration of Conformity

Hereby we declare that the machines as stated below

Type XTS 204

Conform to the EC Directives:
Low Voltage Directive 2014/35/EEC
EMC Directive 2014/30/EEC
Harmonised European Standard: EN/IEC 60974-1
This is to certify that the tested sample is in conformity with all provisions of the above detailed EU directives and product standards.

9.1 RoHS Compliance Declaration

Directive 2011/65/EU of the European Parliament
Amended 2015/863 and 2017/2102

Restriction of use of certain hazardous substances in electrical and electronic equipment

Type: XTS 204

The above listed products are certified to be compliant with the rohs directive with all homogeneous component parts being controlled to ensure material contents as per the list below.

Cadmium 0.01% by weight
Lead 0.1% by weight
Mercury 0.1% by weight
Hexavalent chromium 0.1% by weight
Polybrominated biphenyl's (pbbs) 0.1% by weight
Polybrominated diphenyl ethers (pbdes) 0.1% by weight

It should be noted that under specific exempted applications, where lead is used as an alloying element the following limits are applied in accordance with the regulations.

Copper and copper alloy parts use less than 4% by weight of each homogeneous component.

Steel and steel alloy parts use less than 4% by weight of each homogeneous component.

Aluminium and aluminium alloy parts use less than 4% by weight of each homogeneous component.

Only dispose off in authorised sites for electrical and electronic waste do not dispose of with general refuse or landfill waste.

9.2 WEEE Statement

WEEE (Waste Electrical & Electronic Equipment) 2012/19/EU

In relation to implementing the legislation, Parweld has established relevant recycling and recovery methods. We have been fully compliant against the marking requirements since August 2005. Parweld is registered in the UK with the Environment agency as detailed below. For WEE compliance outside the UK please contact your supplier/Importer

Parweld is registered with a compliance scheme Official registration number is WEE/FD0255QV

When your equipment reaches the end of its service life you should return it to Parweld where it will be reconditioned or processed for recycling.

9.3 Statement of Warranty

Limited Warranty:

Parweld Ltd, hereafter, “Parweld” warrants its customers that its products will be free of defects in workmanship or material. Should any failure to conform to this warranty appear within the time period applicable to the Parweld products as stated below, Parweld shall, upon notification thereof and substantiation that the product has been stored, installed, operated, and maintained in accordance with Parweld’s specifications, instructions, recommendations and recognized standard industry practice, and not subject to misuse, repair, neglect, alteration, or accident, correct such defects by suitable repair or replacement, at Parweld’s sole option, of any components or parts of the product determined by Parweld to be defective.

Parweld makes no other warranty, express or implied. This warranty is exclusive and in lieu of all others, including, but not limited to any warranty of merchantability or fitness for any particular purpose.

Limitation of Liability:

Parweld shall not under any circumstances be liable for special, indirect or consequential damages, such as, but not limited to, lost profits and business interruption. The remedies of the purchaser set forth herein are exclusive and the liability of Parweld with respect to any contract, or anything done in connection therewith such as the performance or breach thereof, or from the manufacture, sale, delivery, resale, or use of any goods covered by or furnished by Parweld whether arising out of contract, negligence, strict tort, or under any warranty, or otherwise, shall not, except as expressly provided herein, exceed the price of the goods upon which such liability is based. No employee, agent, or representative of Parweld is authorized to change this warranty in any way or grant any other warranty.

Purchaser’s rights under this warranty are void if replacement parts or accessories are used which in Parweld’s sole judgement may impair the safety or performance of any Parweld product.

Purchaser’s rights under this warranty are void if the product is sold to purchaser by non-authorized persons.

parweld

WELDING THE FUTURE

Parweld Limited
Bewdley Business Park
Long Bank
Bewdley
Worcestershire
England
DY12 2TZ

tel. +44 1299 266800

www.parweld.co.uk
info@parweld.co.uk