APT FORGE PULSE

parweld

Contents

Optimised for Performance 3
Advanced Power Technology 4
Job List Setting Table ST 5
Front Panel ST 6
Job List Setting Table PR. 7
Front Panel PR 8
FP220C 9
FP353C 10
FP353CW 11
FP400SW 12
FP400S 13
FP500S 14
FP500SW 15

Machine Icon Key

- Metal Inert Gas welding (MIG)
- Tungsten Inert Gas welding (TIG)
- Manual Metal Arc welding (MMA)
- Air plasma cutting
- Constant Current control for TIG and MMA applications
- Direct Current output
- Will work with 50 or 60Hz supply
- Suitable for use with single phase supply
- Spot welding timer
- Double Pulse
- Machine will provide Alternating Current or Direct Current output
- Suitable for use with three phase supply
- Constant Voltage control for MIG welding applications
- Forced air fan cooling
- Two roll MIG wire feeder
- Four roll MIG wire feeder
- Reversing polarity to allow use with Gas or Gasless MIG wires
- Synergic MIG control for fast easy setting
- Stick welding mode for high speed spot welding
- Duo Pulse
- Momentary or latching trigger operation
- Accepts 1Kg or 5Kg wire spools
- Accepts 5Kg or 15Kg wire spools
- Mesh cutting option
- Non HF torch starting with pilot arc
- HF torch starting with pilot arc
- Power pulsing of the output for improved control and penetration
- HF start (non-contact) TIG
- DC mix for increased speed AC welding
- Lift start TIG (contact) with reduced power start
- Scratch (contact) start TIG with full welding current
- Arc force, reduces electrode shorting when to close to the job
- Hot start boosts the power at the start to reignite the electrode cleanly
- Manual Metal Arc welding (MMA)
- No load voltage is reduced when power source is idling
- Multi-wave A/C TIG
- Multi-wave AC welding offers square, sine and triange wave form
- Power pulsing of the output for improved control and penetration

Optimised for Performance

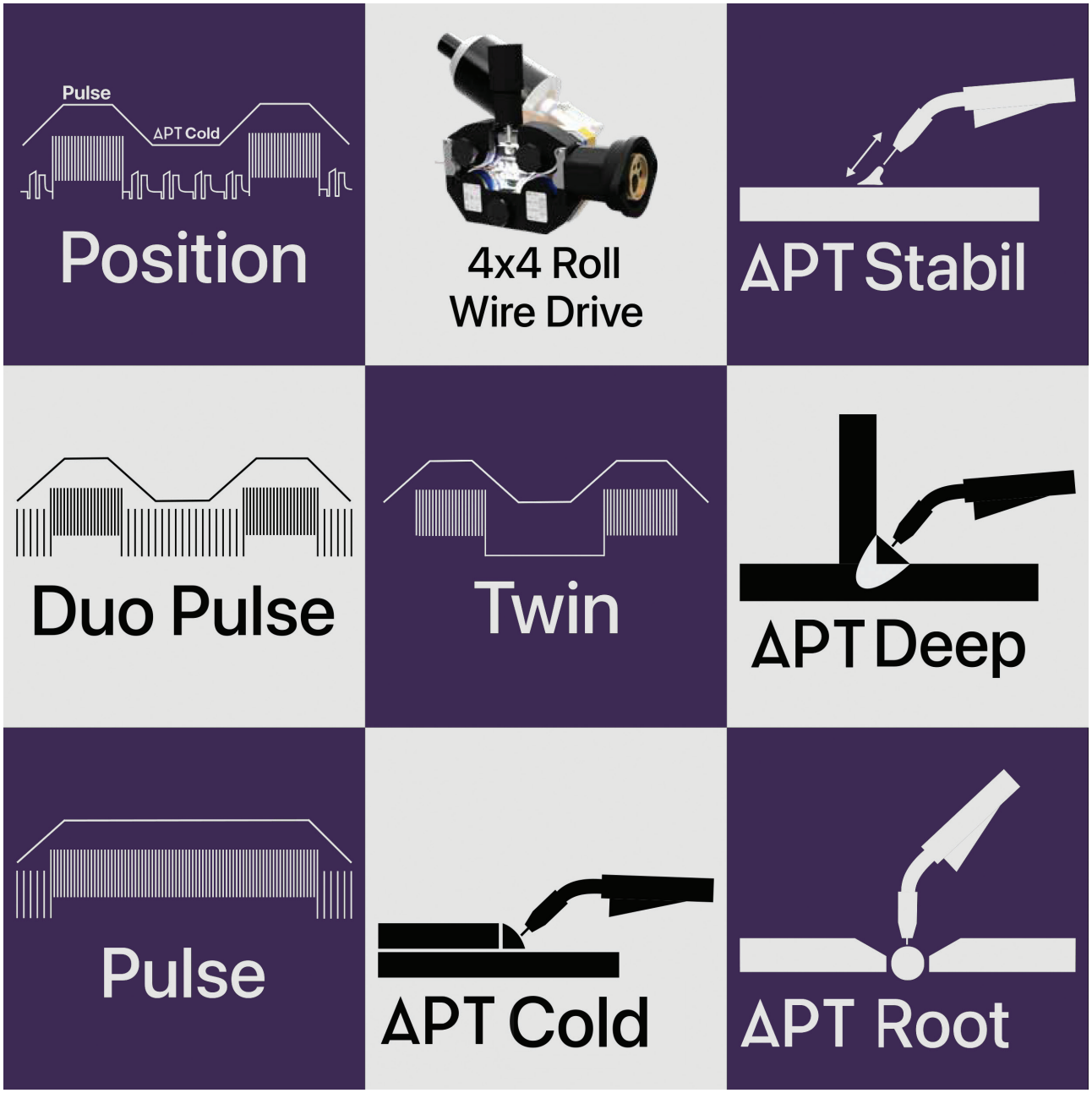

MANUAL WELDING

- MIG/MAG
- XSAW
- MMA

ROBOTIC WELDING

- Robotic MIG/MAG
- Robotic TIG

Advanced Power Technology

25.000 PPS
Wire Speed Control
Perfect Feedibility

Wire Push
Pull-Back
Gas Testing

Spool Cover
With Wire
View

99

Program
Memory

Intelligent
Cooling

RL

Torch and Cable
Calibration

Hose Pack
Support

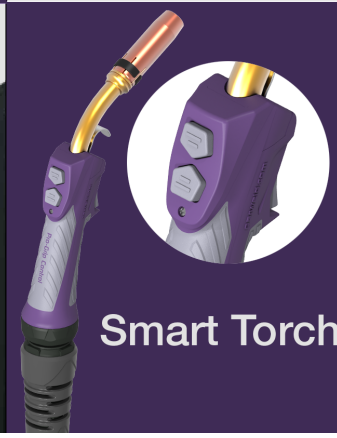

Smart Torch

Military
Connector

Job List Setting Table ST

Located on the wire feeder this lists all the JOBs and Functions which can be selected from the front panel.

Job list, jobs can be loaded using the JOB number or by selecting parameters on the front panel. MMA, Gouging and TIG welding must be selected using the JOB number

Standard - Pulse		0.8	1.0	1.2	1.6
SG2 / SG3	Ar+18%CO_2	8	10	12	16
	Ar+10%CO_2	18	20	22	26
	CO_2 100%	28	30	32	36
Flux Cored		0.8	1.0	1.2	1.6
Steel / FC Metal	Ar+18%CO_2	238	240	242	246
Steel / FC Rutil	Ar+18%CO_2	248	250	252	256
	CO_2 100%			262	266
Steel / FC Basic	Ar+18%CO_2			602	
Steel / FC High Str.	Ar+18%CO_2			592	
Steel / FC Rutil	Self Shielded		720	722	
APT Deep		0.8	1.0	1.2	1.6
SG2 / SG3	Ar+18%CO_2	298	300	302	306
	Ar+10%CO_2	308	310	312	316
APT Root		0.8	1.0	1.2	1.6
SG2 / SG3	Ar+18%CO_2		360	362	
	CO_2 100%		370	372	
	Ar+10%CO_2		500	502	
APT Cold		0.8	1.0	1.2	1.6
SG2 / SG3	Ar+18%CO_2	378	380	382	386
	CO_2 100%	388	390	392	
	Ar+10%CO_2		510	512	

Application	
MIG/MAG Manual	4
TIG (Lift Arc)	5
MMA	6
Gouging	7

Function Pictogram indicates the purpose of the Key function buttons

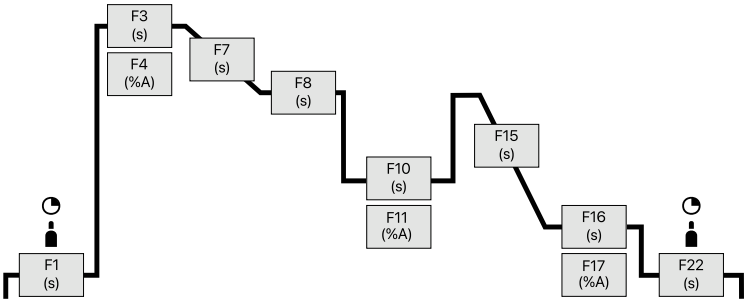

Function list, Functions can be loaded using the F number

	Function	Description	Min	Max
MIG/MAG	F1	Gas pre-flow (s)	0	10
	F2	Start wire speed (m/min)	20	100
	F3	Start time (s)	0	10
	F4	Start current (%)	1	200
	F5	Start arc correction(V)	-9.9	+9.9
	F7	Start slope (s)	0	5
	F8	Duo peak time (s)	0.05	10
	F10	Duo base time (s)	0.05	10
	F11	Duo base amper (%)	1	100
	F12	Duo base arc correction (v)	-9.9	+9.9
	F15	End down slope (s)	0	10
	F16	End time (s)	0	10
	F17	End current (%)	1	200
	F18	End arc correction (V)	-9.9	+9.9
	F20	End burn back (-)	0	15
	F21	End wire cut mode (-)	0	2
	F22	Gas post-flow (s)	0	10
	F23	Smart trigger (-)	0	10
	F24	Penetration stabilizer (m/min)	0	10

	Function	Description	Min	Max
MMA	F25	Hot start time (s)	0	10
	F26	Hot start current (%)	1	200
	F27	Arc force (-)	0	+50
	F28	Antistick (s)	0	2
	F29	VRD function (-)	0	1
OTHERS	F34	Tack/stich mode (-)	0	2
	F35	Cooling mode (-)	0	4
	F36	Motor current (A)	0	4
	F37	Motor current limit (A)	0.7	7
	F38	Auto load default values (-)	0	1
	F39	Motor control firmware (-)	-	-
	F40	Power control firmware (-)	-	-
	F41	Arc on time (h)	0	4
	F42	Machine on time (h)	0	4
	F45	Wire speed correction (m/min)	-2	+2
	F48	Status light template	0	3
	F49	Controller mode	0	9
	F50	RL cable calibration (mOhm)	0	30
TIG	F31	TIG V stop limit (V)	18	18
	F32	TIG comfort stop sensitivity (V)	-2	+2

Parweld reserves the right to change or update the JOBs and Functions through software updates in the machine that may not be reflected on this list

Front Panel ST

FOR FLUX-CORED WIRE AND STEEL SOLUTIONS

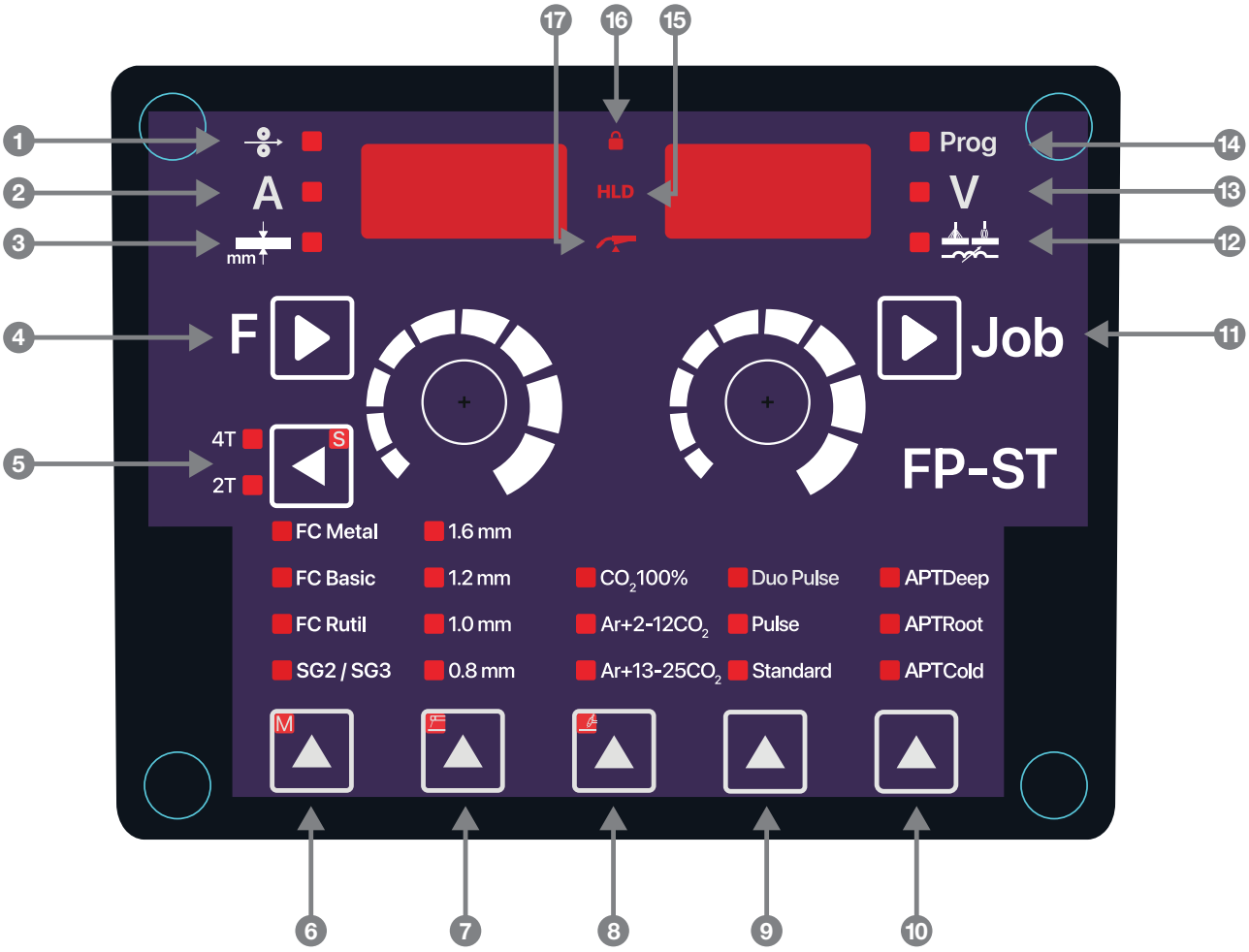

1. Wire Feed Speed
2. Welding Current
3. Material Thickness Selection
4. Menu Selection / Press and Hold Function Settings
5. Trigger Selection
6. Material Type Selection / Press and Hold for Manual Welding
7. Wire Diameter Selection / Press and Hold for TIG Welding
8. Shielding Gas Selection / Press and Hold for MMA Welding
9. Standard Process Selection
10. Special Process Selection
11. Menu Selection / Press and Hold Job Settings
12. Inductance
13. Voltage
14. Program Memory
15. Hold Indicator
16. Lock Indicator
17. Trigger Indicator

Job List Setting Table PR

Located on the wire feeder this lists all the JOBs and Functions which can be selected from the front panel.

Job list, jobs can be loaded using the JOB number or by selecting parameters on the front panel. MMA, Gouging and TIG welding must be selected using the JOB number

Standard - Pulse			0.8	1.0	1.2	1.6
SG2 / SG3		Ar+18%CO_2	8	10	12	16
		Ar+10%CO_2	18	20	22	26
		CO_2 100%	28	30	32	36
CrNi	308 / 316 / 318 / 19 9 / 19 12 3	Ar+2.5%CO_2	68	70	72	76
CuSi		Ar100%	178	180	182	186
CuAl		Ar100%	188	190	192	196
AlMg4,5 Mn		Ar100%	118	120	122	126
AlSi		Ar100%	138	140	142	146
Flux Cored			0.8	1.0	1.2	1.6
Steel / FC Metal		Ar+18%CO_2	238	240	242	246
Steel / FC Rutil		Ar+18%CO_2	248	250	252	256
		CO_2 100%			262	266
Steel / FC Basic		Ar+18%CO_2			602	
CrNi / FC Metal		Ar+2.5%CO_2			272	276
CrNi / FC Rutil		Ar+18%CO_2			282	286
CrNi / FC Rutil		CO_2 100%			292	296
Steel / FC High Str.		Ar+18%CO_2			592	
Steel / FC Rutil		Self Shielded		720	722	
APT Deep			0.8	1.0	1.2	1.6
SG2 / SG3		Ar+18%CO_2	298	300	302	306
		Ar+10%CO_2	308	310	312	316
CrNi	308 / 316 / 318 / 19 9 / 19 12 3	Ar+2.5%CO_2		640	642	646
AlMg4,5 Mn		Ar100%			332	336
AlSi		Ar100%			342	346
APT Root			0.8	1.0	1.2	1.6
SG2 / SG3		Ar+18%CO_2		360	362	
		CO_2 100%		370	372	
		Ar+10%CO_2		500	502	
APT Cold			0.8	1.0	1.2	1.6
SG2 / SG3		Ar+18%CO_2	378	380	382	386
		CO_2 100%	388	390	392	
		Ar+10%CO_2		510	512	
CrNi	308 / 316 / 318 / 19 9 / 19 12 3	Ar+2.5%CO_2	398	400	402	
Application						
MIG/MAG Manual			4			
TIG (Lift Arc)			5			
MMA			6			
Gouging			7			

Function Pictogram indicates the purpose of the Key function buttons

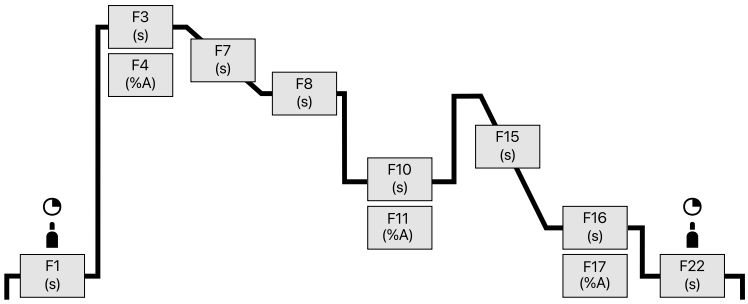

Function list, Functions can be loaded using the F number

	Function	Description	Min	Max
MIG/MAG	F1	Gas pre-flow (s)	0	10
	F2	Start wire speed (m/min)	20	100
	F3	Start time (s)	0	10
	F4	Start current (%)	1	200
	F5	Start arc correction(V)	-9.9	+9.9
	F7	Start slope (s)	0	5
	F8	Duo peak time (s)	0.05	10
	F10	Duo base time (s)	0.05	10
	F11	Duo base amper (%)	1	100
	F12	Duo base arc correction (v)	-9.9	+9.9
	F15	End down slope (s)	0	10
	F16	End time (s)	0	10
	F17	End current (%)	1	200
	F18	End arc correction (V)	-9.9	+9.9
	F20	End burn back (-)	0	15
	F21	End wire cut mode (-)	0	2
	F22	Gas post-flow (s)	0	10
	F23	Smart trigger (-)	0	10
	F24	Penetration stabilizer (m/min)	0	10

	Function	Description	Min	Max
MMA	F25	Hot start time (s)	0	10
	F26	Hot start current (%)	1	200
	F27	Arc force (-)	0	+50
	F28	Antistick (s)	0	2
	F29	VRD function (-)	0	1
OTHERS	F34	Tack/stich mode (-)	0	2
	F35	Cooling mode (-)	0	4
	F36	Motor current (A)	0	4
	F37	Motor current limit (A)	0.7	7
	F38	Auto load default values (-)	0	1
	F39	Motor control firmware (-)	-	-
	F40	Power control firmware (-)	-	-
	F41	Arc on time (h)	0	4
	F42	Machine on time (h)	0	4
	F45	Wire speed correction (m/min)	-2	+2
	F48	Status light template	0	3
	F49	Controller mode	0	9
	F50	RL cable calibration (mOhm)	0	30
TIG	F31	TIG V stop limit (V)	18	18
	F32	TIG comfort stop sensitivity (V)	-2	+2

Parweld reserves the right to change or update the JOBs and Functions through software updates in the machine that may not be reflected on this list

Front Panel PR

FOR ALL TYPES OF METAL WORK (STEEL, CR, CU & AL)

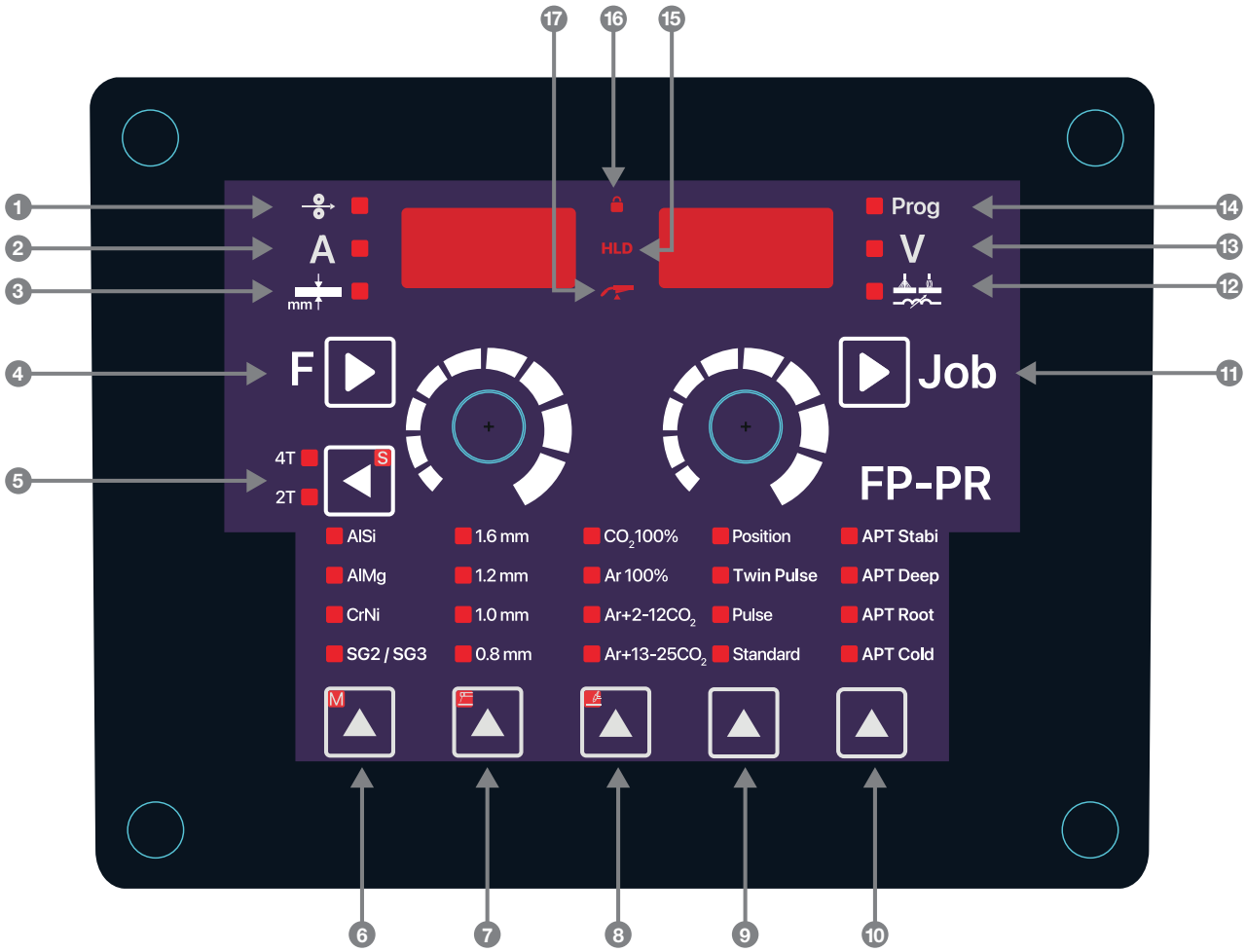

1. Wire Feed Speed
2. Welding Current
3. Material Thickness Selection
4. Menu Selection / Press and Hold Function Settings
5. Trigger Selection
6. Material Type Selection / Press and Hold for Manual Welding
7. Wire Diameter Selection / Press and Hold for TIG Welding
8. Shielding Gas Selection / Press and Hold for MMA Welding
9. Standard Process Selection
10. Special Process Selection
11. Menu Selection Press and Hold / Job Settings
12. Inductance
13. Voltage
14. Program Memory
15. Hold Indicator
16. Lock Indicator
17. Trigger Indicator

FP220C

Part Code

APT-PR-M220C-5
Air Cooled | PR Panel
For all Jobs

APT-ST-M220C-5
Air Cooled | ST Panel
For Steel and Cored Wires

APT-PR-M220C-15
Air Cooled | PR Panel
For all Jobs

APT-ST-M220C-15
Air Cooled | ST Panel
For Steel and Cored Wires

OVERVIEW

FP220C Pulse is welder friendly with its simple and intuitive interface. It provides the possibility to apply gas metal arc (MIG/MAG), argon (TIG), and coated electrode (MMA) processes in a single machine. With its durable and functional design, it can be used safely in all kinds of harsh working conditions.

The FP220C Pulse offers an intuitive interface that highlights the settings users use most frequently. Thanks to its effortless and user-friendly interface, it is designed to reduce the need for trained welders.

Wire Spool 5Kg

Wire Spool 15Kg

KEY FEATURES

- Welder-friendly operation
- Experience 174 welding program
- Memory capacity of 99 programs
- Advanced function table
- Spatter-free welding technique
- High welding speed, low heat input
- 4x4 wire feeder unit
- 256 PPR optical counter
- Military-standard connector
- Smart cooling
- Hose pack support
- 2 Years return to base warranty
- Manufactured to IP23, EN/IEC 60974-1 RoHS Directive, Low Voltage Directive and EMC Directive (CE Compliant)

PARAMETER	VALUE
Input Voltage	230V | Single Phase
Mains Voltage Tolerance	- 10 % / + 15 %
Minimum Welding Current	10A
Maximum Welding Current	220A
MIG Duty Cycle, 40°C	90A 100%, 220A 13%
TIG Duty Cycle, 40°C	90A 100%, 220A 13%
MMA Duty Cycle, 40°C	90A 100%, 220A 13%
Open – Circuit Voltage	14 V - 60 V
Factory Delivered Roller	0.8 + 1.0 mm / Steel
Weight	Air Cooled, 21kg
Standard Accessories	5m Power Cable (3 x 1.5mm²)
	5m Earth Clamp (35mm²)
	Gas Hose (1.5m)
Dimensions (W, L, H)	324mm x 483mm x 417mm
Certification	CE

FP353C

Part Code

APT-PR-M350C
Air Cooled | PR Panel
For all Jobs

APT-ST-M350C
Air Cooled | ST Panel
For Steel and Cored Wires

OVERVIEW

FP353C Pulse is welder friendly with its simple and intuitive interface. It provides the possibility to apply gas metal arc (MIG/MAG), argon (TIG), and coated electrode (MMA) processes in a single machine. With its durable and functional design, it can be used safely in all kinds of harsh working conditions.

The FP353C Pulse offers an intuitive interface that highlights the settings users use most frequently. Thanks to its effortless and user-friendly interface, it is designed to reduce the need for trained welders.

KEY FEATURES

- Welder-friendly operation
- Up to 174 welding programs
- Memory capacity of 99 programs
- Advanced function table
- Spatter-free welding technique
- High welding speed, low heat input
- 4x4 wire feeder unit
- ST models offer steel and flux cored jobs
- PR models cover any material jobs
- Smart cooling
- Hose pack support
- 2 Years return to base warranty
- Manufactured to IP23, EN/IEC 60974-1 RoHS Directive, Low Voltage Directive and EMC Directive (CE Compliant)

PARAMETER	VALUE
Input Voltage	400V | 3 Phase
Mains Voltage Tolerance	- 10 % / + 15 %
Minimum Welding Current	30A
Maximum Welding Current	350A
MIG Duty Cycle, 40°C	350A 40%, 300A 60%, 250A 100%
TIG Duty Cycle, 40°C	350A 40%, 300A 60%, 250A 100%
MMA Duty Cycle, 40°C	350A 40%, 300A 60%, 250A 100%
Open – Circuit Voltage	60V
Factory Delivered Roller	1.0 + 1.2mm / Steel
Weight	42kg
Standard Accessories	5m Power Cable (4 x 2.5mm²)
	5m Earth Clamp (50mm²)
	Gas Hose (1.5m)
Dimensions (W, L, H)	532mm x 624mm x 736mm
Certification	CE

FP353CW

Part Code

APT-PR-M350CW
Water Cooled | PR Panel
For all Jobs

APT-ST-M350CW
Water Cooled | ST Panel
For Steel and Cored Wires

OVERVIEW

FP353CW Pulse is welder friendly with its simple and intuitive interface. It provides the possibility to apply gas metal arc (MIG/MAG), argon (TIG), and coated electrode (MMA) processes in a single machine. With its durable and functional design, it can be used safely in all kinds of harsh working conditions.

The FP353CW Pulse offers an intuitive interface that highlights the settings users use most frequently. Thanks to its effortless and user-friendly interface, it is designed to reduce the need for trained welders.

KEY FEATURES

- Welder-friendly operation
- Up to 174 welding programs
- Memory capacity of 99 programs
- Advanced function table
- Spatter-free welding technique
- High welding speed, low heat input
- 4x4 wire feeder unit
- ST models offer steel and flux cored jobs
- PR models cover any material jobs
- Smart cooling
- Hose pack support
- 2 Years return to base warranty
- Manufactured to IP23, EN/IEC 60974-1 RoHS Directive, Low Voltage Directive and EMC Directive (CE Compliant)

PARAMETER	VALUE
Input Voltage	400V | 3 Phase
Mains Voltage Tolerance	- 10 % / + 15 %
Minimum Welding Current	30A
Maximum Welding Current	350A
MIG Duty Cycle, 40°C	350A 40%, 300A 60%, 250A 100%
TIG Duty Cycle, 40°C	350A 40%, 300A 60%, 250A 100%
MMA Duty Cycle, 40°C	350A 40%, 300A 60%, 250A 100%
Open – Circuit Voltage	60V
Factory Delivered Roller	1.0 + 1.2 mm / Steel
Weight	55kg
Standard Accessories	5m Power Cable (4 x 2.5mm²)
	5m Earth Clamp (50mm²)
	Gas Hose (1.5m)
Dimensions (W, L, H)	532 × 860 × 974mm
Certification	CE

FP400SW

Part Code

APT-PR-M403SW
Water Cooled | PR Panel
For all Jobs

APT-ST-M403SW
Water Cooled | ST Panel
For Steel and Cored Wires

OVERVIEW

FP400SW Pulse is welder friendly with its simple and intuitive interface. It provides the possibility to apply gas metal arc (MIG/MAG), argon (TIG), and coated electrode (MMA) processes in a single machine. With its durable and functional design, it can be used safely in all kinds of harsh working conditions.

The FP400SW Pulse offers an intuitive interface that highlights the settings users use most frequently. Thanks to its effortless and user-friendly interface, it is designed to reduce the need for trained welders.

KEY FEATURES

- Welder-friendly operation
- Up to 174 welding programs
- Memory capacity of 99 programs
- Advanced function table
- Spatter-free welding technique
- High welding speed, low heat input
- 4x4 wire feeder unit
- ST models offer steel and flux cored jobs
- PR models cover any material jobs
- Smart cooling
- Hose pack support
- 2 Years return to base warranty
- Manufactured to IP23, EN/IEC 60974-1 RoHS Directive, Low Voltage Directive and EMC Directive (CE Compliant)

PARAMETER	VALUE
Input Voltage	400 V | 3 Phase
Mains Voltage Tolerance	- 10 % / + 15 %
Minimum Welding Current	30 A
Maximum Welding Current	400 A
MIG Duty Cycle, 40°C	400 A 40%, 360 A 60%, 300 A 100%
TIG Duty Cycle, 40°C	400 A 40%, 360 A 60%, 300 A 100%
MMA Duty Cycle, 40°C	400 A 40%, 360 A 60%, 300 A 100%
Open – Circuit Voltage	63 V - 82 V
Factory Delivered Roller	1.0 + 1.2 mm / Steel
Weight	Liquid Cooled, 107 kg
Standard Accessories	5m Power Cable (4 x 4mm²)
	5m Earth Clamp (70mm²)
	Interconnection H.P (5m)
Dimensions (W, L, H)	532mm x 974mm x 1270mm
Certification	CE

FP400S

Part Code

APT-PR-M403S
Air Cooled | PR Panel
For all Jobs

APT-ST-M403S
Air Cooled | ST Panel
For Steel and Cored Wires

OVERVIEW

FP400S Pulse is welder friendly with its simple and intuitive interface. It provides the possibility to apply gas metal arc (MIG/MAG), argon (TIG), and coated electrode (MMA) processes in a single machine. With its durable and functional design, it can be used safely in all kinds of harsh working conditions.

The FP400S Pulse offers an intuitive interface that highlights the settings users use most frequently. Thanks to its effortless and user-friendly interface, it is designed to reduce the need for trained welders.

KEY FEATURES

- Welder-friendly operation
- Up to 174 welding programs
- Memory capacity of 99 programs
- Advanced function table
- Spatter-free welding technique
- High welding speed, low heat input
- 4x4 wire feeder unit
- ST models offer steel and flux cored jobs
- PR models cover any material jobs
- Smart cooling
- Hose pack support
- 2 Years return to base warranty
- Manufactured to IP23, EN/IEC 60974-1 RoHS Directive, Low Voltage Directive and EMC Directive (CE Compliant)

PARAMETER	VALUE
Input Voltage	400V | 3 Phase
Mains Voltage Tolerance	- 10 % / + 15 %
Minimum Welding Current	30A
Maximum Welding Current	400A
MIG Duty Cycle, 40°C	400A 40%, 360A 60%, 300A 100%
TIG Duty Cycle, 40°C	400A 40%, 360A 60%, 300A 100%
MMA Duty Cycle, 40°C	400A 40%, 360A 60%, 300A 100%
Open – Circuit Voltage	60V
Factory Delivered Roller	1.0 + 1.2 mm / Steel
Weight	Air Cooled, 92 kg
Standard Accessories	5m Power Cable (4 x 2.5mm²)
	5m Earth Clamp (50mm²)
	Interconnection H.P (5m)
Dimensions (W, L, H)	532mm x 974mm x 1032mm
Certification	CE

FP500S

Part Code

APT-PR-M503S
Air Cooled | PR Panel
For all Jobs

APT-ST-M503S
Air Cooled | ST Panel
For Steel and Cored Wires

OVERVIEW

FP500S Pulse is welder friendly with its simple and intuitive interface. It provides the possibility to apply gas metal arc (MIG/MAG), argon (TIG), and coated electrode (MMA) processes in a single machine. With its durable and functional design, it can be used safely in all kinds of harsh working conditions.

The FP500S Pulse offers an intuitive interface that highlights the settings users use most frequently. Thanks to its effortless and user-friendly interface, it is designed to reduce the need for trained welders.

KEY FEATURES

- Welder-friendly operation
- Up to 174 welding programs
- Memory capacity of 99 programs
- Advanced function table
- Spatter-free welding technique
- High welding speed, low heat input
- 4x4 wire feeder unit
- ST models offer steel and flux cored jobs
- PR models cover any material jobs
- Smart cooling
- Hose pack support
- 2 Years return to base warranty
- Manufactured to IP23, EN/IEC 60974-1 RoHS Directive, Low Voltage Directive and EMC Directive (CE Compliant)

PARAMETER	VALUE
Input Voltage	400V
Mains Voltage Tolerance	- 10 % / + 15 %
Minimum Welding Current	30A
Maximum Welding Current	500A
MIG Duty Cycle, 40°C	500A 40%, 430A 60%, 360A 100%
TIG Duty Cycle, 40°C	500A 40%, 430A 60%, 360A 100%
MMA Duty Cycle, 40°C	500A 40%, 430A 60%, 360A 100%
Open – Circuit Voltage	60V
Factory Delivered Roller	1.0 + 1.2 mm / Steel
Weight	92kg
Standard Accessories	5m Power Cable (4 x 4mm²)
	5m Earth Clamp (70mm²)
	Interconnection H.P (5m)
Dimensions (W, L, H)	532mm x 974mm x 1032mm
Certification	CE

FP500SW

Part Code

APT-PR-M503SW
Water Cooled | PR Panel
For all Jobs

APT-ST-M503SW
Water Cooled | ST Panel
For Steel and Cored Wires

OVERVIEW

FP500SW Pulse is welder friendly with its simple and intuitive interface. It provides the possibility to apply gas metal arc (MIG/MAG), argon (TIG), and coated electrode (MMA) processes in a single machine. With its durable and functional design, it can be used safely in all kinds of harsh working conditions.

The FP500SW Pulse offers an intuitive interface that highlights the settings users use most frequently. Thanks to its effortless and user-friendly interface, it is designed to reduce the need for trained welders.

KEY FEATURES

- Welder-friendly operation
- Up to 174 welding programs
- Memory capacity of 99 programs
- Advanced function table
- Spatter-free welding technique
- High welding speed, low heat input
- 4x4 wire feeder unit
- ST models offer steel and flux cored jobs
- PR models cover any material jobs
- Smart cooling
- Hose pack support
- 2 Years return to base warranty
- Manufactured to IP23, EN/IEC 60974-1 RoHS Directive, Low Voltage Directive and EMC Directive (CE Compliant)

PARAMETER	VALUE
Input Voltage	400V
Mains Voltage Tolerance	- 10 % / + 15 %
Minimum Welding Current	30A
Maximum Welding Current	500A
MIG Duty Cycle, 40°C	500A 40%, 430A 60%, 360A 100%
TIG Duty Cycle, 40°C	500A 40%, 430A 60%, 360A 100%
MMA Duty Cycle, 40°C	500A 40%, 430A 60%, 360A 100%
Open – Circuit Voltage	630V
Factory Delivered Roller	1.0 + 1.2 mm / Steel
Weight	107kg
Standard Accessories	5m Power Cable (4 x 4mm²)
	5m Earth Clamp (70mm²)
	Interconnection H.P (5m)
Dimensions (W, L, H)	532mm x 974mm x 1270mm
Certification	CE

APT FORGE PULSE

Parweld Limited

Bewdley Business Park, Long Bank, Bewdley,
Worcestershire DY12 2TZ

Tel: +44 (0)1299 266 800

UK and Ireland Sales Tel: 01299 269 500
Export Sales Tel: +44 (0)1299 269 507

Email: info@parweld.co.uk Website: www.parweld.com

parweld
WELDING THE FUTURE

parweld.com parweld ParweldTV parweld_uk parweld-ltd